CCP - DIMENSIONS:

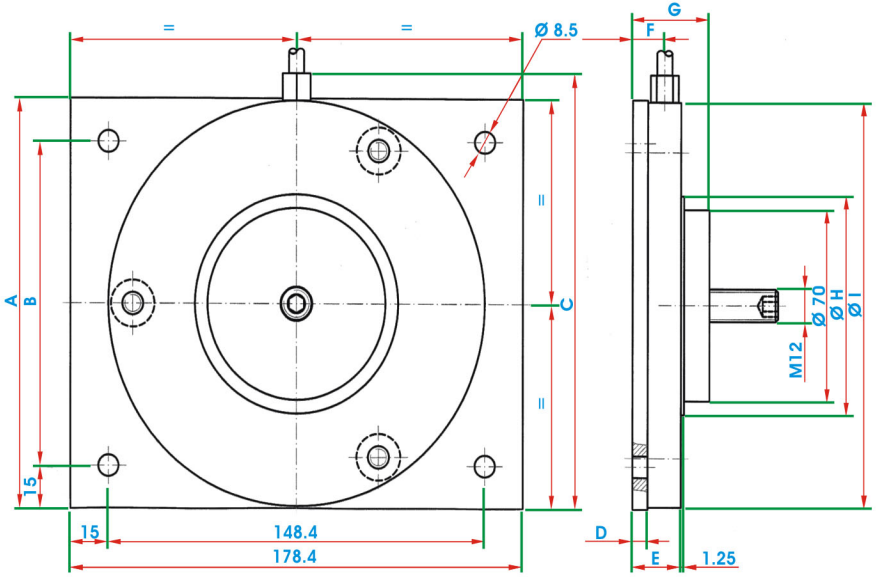

ALL DIMENSIONS IN MILLIMETRES

MODEL	A	B	C	D	E	F	G	H	I
2000 Kg	150	125	159.2	6	19	12.5	30.25	80	148.4
4000 Kg	160	130	170	8	21	14.5	32.25	95	160